NEESgrid TelePresence System Overview
- White Paper -
(*DRAFT*)

Nestor J. Zaluzec

[1] Materails Science / Mathematics and Computer Science Divisions,
Argonne National Laboratory

Feedback on this document should be directed to zaluzec@aaem.amc.anl.gov . This is verion 20020306-1 of the TelePresence System document, there are no earlier released versions.

Table of Contents

1 Scope of this Document
2 Background
3 Overview of Basic System Components
4 Hardware Functionality
5 References
6 Acknowledgements
7 Appendix: Itemized Procurement Details

1 Scope of This Document

This document is intended to assist NEES Equipment Sites (ES) in understanding the functionality of the NEESgrid TelePresence Mode, and also to aid in establishing a budget estimate necessary to procure a uniform set of resources to support the NEESgrid TelePresence Environment. It should be read in conjunction with the NEES Scoping Study[1], NEES-POP [2] and the NEES LAN[3] documents and seeks to outline specific hardware and software which supports the current configuration for NEESgrid TelePresence Mode as currently implemented at the date of issue. It should be expected that the hardware and software described herein will evolve as the NEESgrid project development continues, thus changes in the configurations described are to be expected. Evolution of the system architecture, which will occur during the course of this project, means that some of the components specified in early versions of this document may become superceeded or obsolete. Every attempt will be made to retain compatibility, to the maximum extent possible, with the recommendations of previous versions of this document.

It is intended that this document also provides sufficient information for a NEES Equipment Site to develop their own procurement scenerios for TelePresence resources. Before an actual procurement is executed, it is recommended that an Equipment Site contact the System Integrator to confirm that the latest recommendations are in hand.

2 Background

TelePresence, in the context of this document, should be regarded as a user environment which facilitates the observation and/or operation of a scientific resource by a remote individual over the Internet. Specifically it refer collectively to an interface, hardware, and software which facilitates the linking of an person to a resource, rather than a process or a computer to a resource. The former might be more accurately be considered an machine-to-machine communication in the sense that a human could be completely "out of the loop" during an experiment. Such a computationally mediated or hybrid experiment is within the scope of the NEES collaboratory but not within the context of this working definition of TelePresence. Instead, we are specifically developing an environment and interface to the NEES Collaboratory which links an individual (or groups of individuals) to NEES resources giving them a virtual "Presence" at an experimental site without actually being there. Thus in this document, we will not consider any details of the low level system architecture, where the NTOP (**N**EES **T**ele**OP**erations) services and protocols reside. These low level (Grid) services form the backbone upon which the TelePresence Applications and Interfaces are built and are not within the scope of this document.

Phase 1 of the TelePresence component of the NEESgrid Project Execution Plan (PEP)[4] consists of rationalizing and building a prototype system for a *passive* TelePresence Mode (TPM) which can be deployed at early adaptor NEES Equipment Sites. This system will then be augmented to extend it's capabilities during Phase 2 and expanded to include *active* TelePresence Mode in Phases 3. In order to accomplish this task, in the time alloted, the system must be constructed from both commodity and open source hardware and software components to maximize the benefit/cost ratio and to minimize development time. This work will leverage some existing technologies which were part of the

TelePresence Microscopy Collaboratory Project at ANL (http://tpm.amc.anl.gov), and evolve that work in conjunction with new NEES System Architecture components, which are also being developed as part of NEESgrid project, into a scalable and working environment for the Earthquake Engineering Communtiy.

Phase 1, as stated, begins by building a prototype TelePresence System, into which requisite services needed to from the various component are installed and evaluated. This system will by it's nature consist of a computer and associated hardware and software which creates a uniform TelePresence Environment that can be replicated at an any Equipment Site, although the initial thrust will be focussed upon creating a working system for real world testing with early adaptors.

Functionally, the TPM System should be considered as a component of the NEES POP however, during Phase 1, the TPM System may or may not physically be located either in/or physically positioned next to NEES POP . Said differently, there will be scenerio's where the TPM system may be a standalone computer system which communicates with the NEES POP using the appropriate Grid services, as well as a scenerio where the TPM system can be completely incorporated within the NEES POP machine. At the present time to rule out either option would be premature and ill advised. From the context of a remote client attempting to connect to the NEES site via the TelePresence environment there will be no discerable difference in either of these two scenerios as the transfer of information will be seamless. From the context of an Equipment site, this implies simply that the NEES POP could be two "machines" instead of one. Given the inexpensive nature of the computer hardware involved, compared to the cost of the NEES experimental equipment (~ $5K vs $5M) this is considered to be a non-issue.

Regardless of the number of "machines" which are employed, the TPM system will provide a ubiquitous thin-client WWW based TelePresence environment to a NEES Equipment Site for all remote users. The specific functionality provided by the *passive* TelePresence Mode was outlined in the NEESgrid Scoping Study document[5] and it includes the following:

- Remote display that is intuitive to users
- Virtual experimental windows that can be configured remotely to permit viewing of user-selected experimental parameters and/or sensor datastreams in near realtime.
- Remote viewing of lab space and physical experiment by remote telerobotic video cameras having ZPT (zoom-pan-tilt) capabilities.
- Remote viewing using fixed cameras that are positioned by a local collaborator for site-specific observations.
- Remote viewing of high-resolution, nonvideo static images.
- Remote audio connection to the lab space to monitor the sounds of the experiment.
- Remote viewing of datasets using simple visualization tools.
- An electronic notebook for documenting and sharing experimental data integrated into grid services. The notebook is a functional user interface to both the data and also user notes and records. Access to the information will be integrated into grid services, and the user interface must have security models built in.

- Synchronous and asynchronous monitoring of the preparation and construction of test specimens.

The thin-client Browser Interface provided with the TPM system will provide all of this functionality. It will provide user configurable data windows, in both public and private sessions, permitting the remote client to select and retrieve audio, video, and numerical and streamed data from a NEES Equipment Site as authorized via the Grid services provided via the NEES POP.

3 Overview of Basic System Components

As discussed in section 2, in a minimal configuration, a basic TPM System may be incorporated into some of the hardware components that compose the NEES POP . However, in this document we will assume the alternate case and that a second machine exists. This scenerio would apply, for example, to a high traffic site where for example that a large number of video resources will be accessed by remote sites. As such we shall document the configuration of a TPM System that will not impact upon the NEES POP, but rather operate in seemless coordination with that system.

Figure 1 presents a diagram of the range components at an equipment site which are functionally related to access to a NEES site in TelePresence Mode. This configuration of the TPM resources consists of:

- A Grid enabled Linux Server: which communicates to the NEES POP, remote clients and experimental resources using the appropriate protocols
- Internet Aware Video Appliances
- Internet Aware Audio Appliances
- Connections to Audio and Video Sources
- Video and Audio Data Streams from I/O devices
- Connections to Data Acqusition and Control System(s)
- Data Streams to/from the DAQ and Control System(s)

The TPM Server connects, via the network, both to the NEES POP and the various resource components of the NEES Equipment Sites. External clients, either operting in a public or private session, gain authorized access to the NEES TPM Environment using authorization provided by the NEES POP. Depending upon the functionality required by the client the TPM server either redirects the user to an appropriate resource, or directly supplies the information requested. In some cases this will include buffered streaming data which is collected by the server and then redirected to the remote client directly from the TPM Server.

A public session or public client for the purposes of this document should be considered any remote connection to the NEES Equipment Site by an individual or organization who is not a Principle Investigator (P.I.). Public clients, in this context, are not directly involved in the experiment, they are considered to be “lurkers” to the events at the NEES site. The PI’s of the experiment will dictate, using the access control mechanisms of the NEES POP, which portion of the information (video, audio, and numeric) at the Equipment Site that a public client is permitted to observe. At all times the public client will be a passive participant in the actual experiment. . A typical public client might consist of a public relations site which allows the general public to “visit” the NEES Lab, a class room full of students

observing/learning about Earthquake Engineering, or an administrative funding agency officer viewing the progress of work from their office. As these clients are on non-critical paths for the conduct of an experiment, their resources will be limited and associated latency in viewing any data is not critical and thus latency is to be expected. In the example shown in figure 1, the public clients are restricted to operation of one (public) telerobotic camera, and have the ability to view a single fixed video stream . [Note: In figure 1, we show 6 video feeds connecting to a video switch, the P.I. by means of a software interface will be able to choose which of the 6 streams of data are directed to the public session.] . The public session is also provided with the capability of listening to one fixed audio source and at the P.I's discretion be permitted to view a limited set of data from the DAQ system. . In order to assure that the public sites do not interfere with the critical data streams for a P.I .the resources for a public client are segregated and will incur data latency should the number of observers become significant.

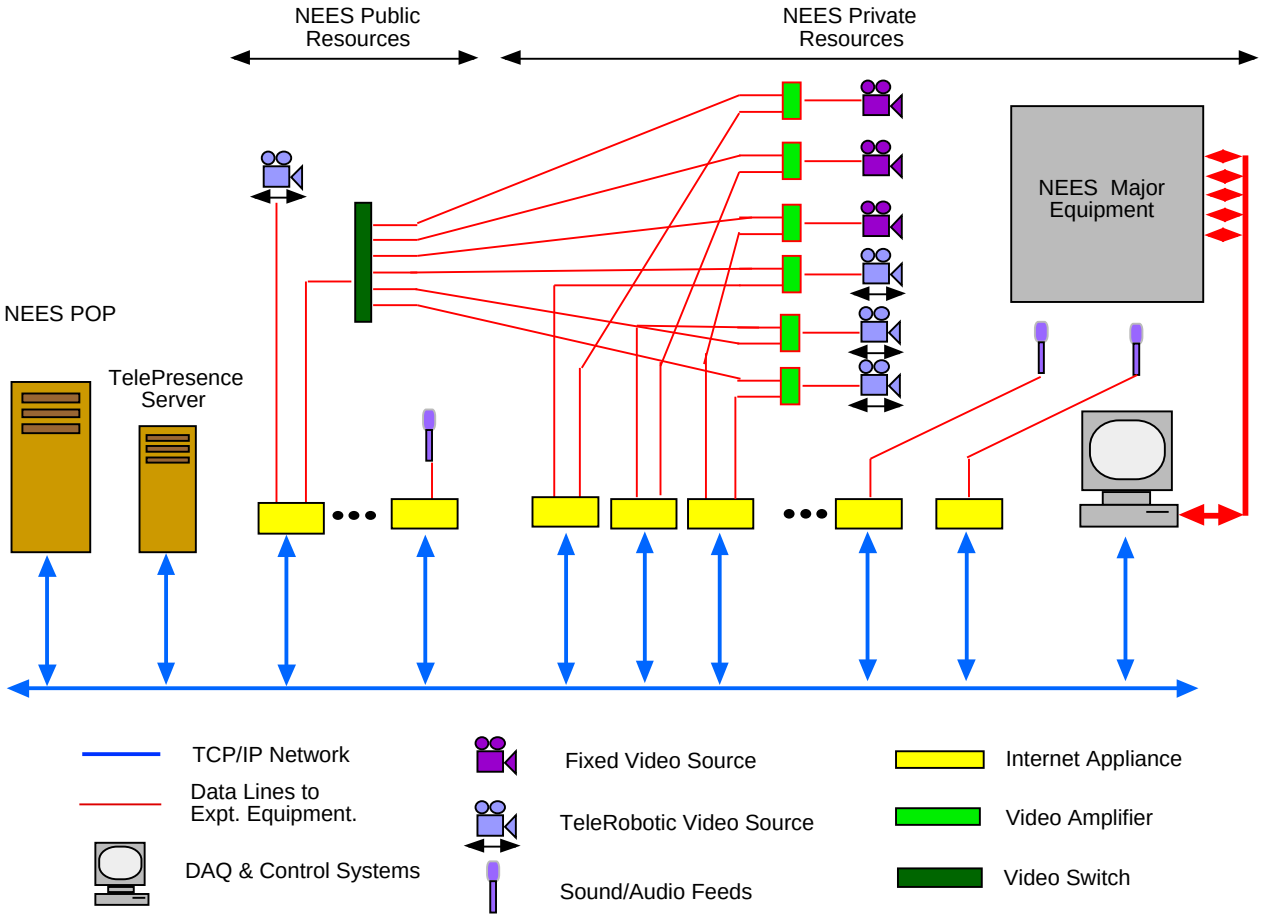

Figure 1: Example of NEES TelePresence System Configuration

A private session or client, is on the other hand, considered to be a project P.I. and therefore requires minimal latency associated with their Telepresence access to the Equipment Site resources. The private

client will have access to any of the resources of the NEES site for which they have authorization granted by the NEES POP. In order to minimize latency, the remote PI's are provided with independent access points to the various streaming data sources. In parallel to these systems, the Equipment site is expected to have conventional viewing stations for local participants, this would be for example, conventional TV monitors for display local video feeds within the immediate laboratory space. .

It should be appreciated that the use of a modular architecture of the TPM system , allows an Equipment Site to build multiple parallel data streaming nodes all functioning using the same basic interface. Thus should a high traffic site decide additional "private" sessions are appropriate, they may be added as needed to segregate various groups and/or resources. For example, additional private sessions for graduate students, local P.I.'s , remote P.I.'s etc may become desirable, and such this can be trivially accomplished. Alternatively, a large or diverse Equipment site might choose to build multiple permanently configured TPM enabled instruments at different locations in different buildings.

Once authorized to access a specific session, the remote client will interface to the TelePresence Environment by means of a standard thin client WWW Browser GUI. This basic user interface will be provided as part of the TPM system. An example of how this might look is illustrated in Figure 2. On the left is an environment which displays 3 video windows as well as a data window into a LabView mesasurement system all within a browser session. To the right, is an entry into an electronic notebook system, which in addition to providing a simple interface to electronically recording observations and results, can be used as a mechanism of recording MetaData on the experiment. This MetaData can be automatically harvested by the NEESgrid services running inconspiciously in the background.

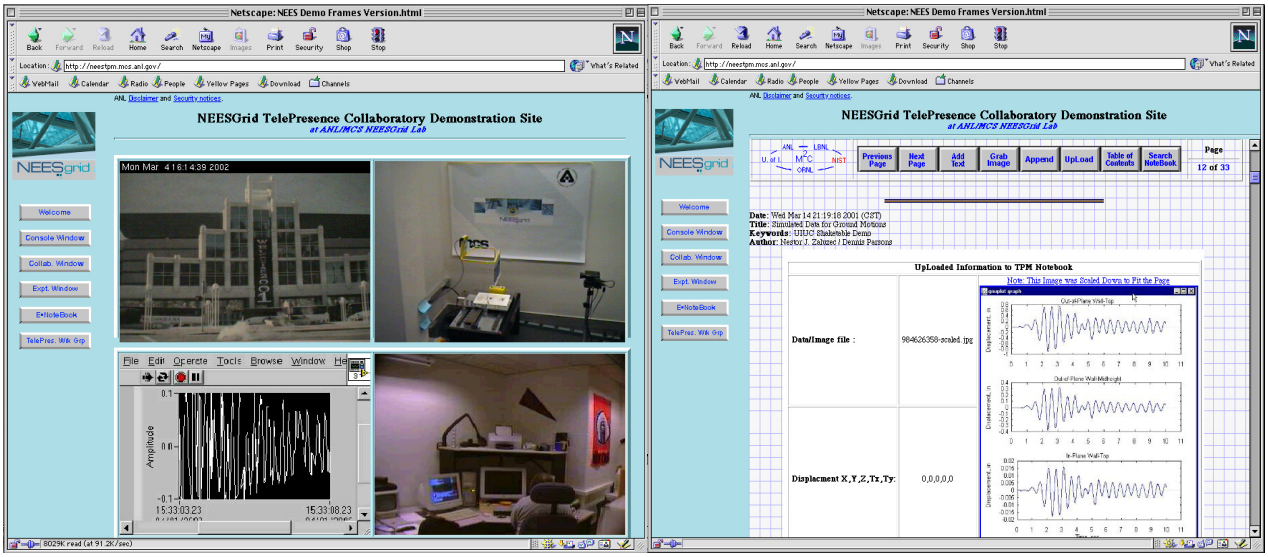

Figure 2: Examples of a prototype Browser-basedTelePresence Interface to NEES ES resources.

The TPM Browser interface will ultimately be customizable by an Equipement Site and, to a lesser extent, in realtime by the on-line remote user, to allow observation of authorized streaming data resources (audio, video, numeric). It should be appreciated that the TPM Browser Interface supplied will be a basic template upon which the individual sites are expected to evolve to fulfill their unique needs. Additional on-line examples of this type of interface can be found at the following URL's.: http://neestpm.mcs.anl.gov, http://tpm.amc.anl.gov, or http://tpm.amc.anl.gov/TPMTecnaiF20, which are links to various public session TPM Collaboratory sites operating at ANL.

The remainder of this document outlines the functions of the various components shown in Figure 1 while the appendix, lists suitable resources which provide the necessary functionality and typical costs . The details provided in this appendix represent current information as of the date of issue of this document .

4 Hardware Functionality

This document does not attempt to specify all computing or networking equipment that a NEES equipment site may require; and it is assumed that independent of the information presented here, that the Equipment Site network has sufficient capacity and Internet connectivity to carry the NEESgrid traffic and data. The hardware detailed herein supplements that described in the NEES POP and the NEES LAN. The appendix of this document lists details of a minimal configuration which satisifies all of the generic descriptions provided below.

4.1 TelePresence Server

This PC based Linux server acts as the principle host for the TelePresence Environment provided to all clients of the NEES Equipement Site. It employs appropriate Grid services for communication to the NEES POP as well as those needed to enable all relevant services to the Equipment Site resources (audio, video and numerical data). The Linux system will be configured to operate using Red Hat Linux 7.x, and have all requisite software tools (Apache WWW server, Perl, …) needed to manage the TelePresence Environment. In addition, in order to provide for public access to streamed data, commodity streaming video software will be procured and hosted on this server. For public sessions it is the intention that this server will be the princple host/provider of buffered/streamed data.

For a low profile NEES site with minimal AV traffic, the functionality of this TPM server may be incorporated directly into the NEES POP, and in this case this portion of the hardware procurement need not be considered. For a high traffic site with significant video needs it would be appropriate to include funds in the budget for this resource.

4.2 Internet Appliances

In order to provide streamed video and audio resources to remote clients we are currently employing commodity internet aware appliances having embedded Linux OS processors on a chip. These video appliances can connect to standard NTSC or PAL video I/O devices (such as TV cameras) using conventional AV connectors for input, while the audio appliances similiarly connect to conventional microphones. Both types of appliances have a direct RJ45 TCP/IP connection providing the capability for streamed output to the network. . These devices digitize video and audio streams and provide data which is directed by the TelePresence Server to the appropriate remote clients either directly, or for the case of public sessions, indirectly via a buffered output using commodity streaming video software. Each of the internet aware video appliances specified in the appendix can in principle accommodate four simultaneous video input streams, however,experience to date has shown that, at the data rated needed for the NEES project, the performance of these appliances degrades beyond 2 input streams. Thus one internet appliance should be procured for every two video input streams which will be shared with remote users who require minimum latency.

Since by design there will be both public as well as private sessions in this configuration, a minimum of 2 each of the video and audio appliances should be procured for each NEES Equipment Site. . One of each for the public and private sessions respectively. At the descretion of the Equipment sites, additional appliances should be procured for every two simultaneous video streams or single audio stream which are expected to be shared with remote P.I.'s. Thus if a site is considering having 10 private and 2 pubic video feeds all of which need to be streamed to remote clients, then one should budget for at least 6 internet appliances.

4.3 Video Switches and Amplifiers

In order to allow efficient management and remote selection of the video feeds to the public internet appliances by the P.I. , the acquisition of at least one remotely operatable video switch, capable of up to 6 switched inputs, is recommended. . This video switch will allow the P.I. to administrator remotely select the video feeds that are being directed to the public site directly from an WWW page, without the need to manually rewire connections as the experiment changes. This is a convenience item and is not required for functional operation of the site.

Given that the various video streams are being shared by multiple devices it also suggested that conventional video amplifiers be procured for each video source Suitable amplifiers are documented in appendix 1.

.

4.4 TeleRobotic Video Source

Provision for remotely operated telerobotic (pan/tilt/zoom) video cameras is considered essential component at each NEES site. At least 2 such cameras for each lab space are recommended. One for the public and at least one for the private sessions. Since these are specialized cameras with interfaces which must be compatible with remote operation, specific models are listed in the appendix.

At the descretion of the Equipment sites, additional telerobotic systems can be procured and simply added to the TPM Environment, the specified telerobotic camera systems are complete units, and include an appropriate internet appliance.

4.5 Fixed Video Sources

The number and selection of fixed analog video sources are the decision of the respective Equipment sites and are not specified herein. For every two fixed video sources which are planned to be "shared" with remote P.I.'s one internet video appliance should be procured as discussed previously. Conventional NTSC and PAL sources can be readily handled using the equipment and software specified herein at resolutions up to ~ 640 x 480 pixels (the NTSC aspect ratio typical of TV cameras) reduced frame sizes of 320x2450 and 160 x 120 are standard options.

At the present time no recommendations for high speed (> 30 fps) and/or high resolution digital video input devices are being offered, these items will be considered during Phase 2 of the TelePresence PEP. In general, these devices will require the development of both data transfer and display protocols. The intent in Phase 2 will be to implement access to this type of data using a Java based interface for acquisition and display in the TPM Environment.

4.6 Fixed Sound/Audio Sources

The number and selection of fixed analog audio sources are the decision of the respective Equipment sites and are not specified herein, however the audio applicances specified should be adquite for all conventional I/O systems. For every fixed audio sources which are planned to be "shared" with remote P.I.'s one internet audio appliance (4.2) should be procured.

4.7 Data Acquisition Systems

The number and selection of Data Acquisition (DAQ) systems are the responsibility of the respective Equipment Sites. The System Integrator will develop a working interface which will allow streaming data from a National Instruments LabView ™ Data Acquisition system to be transmitted to a Grid aware Java applet operating withing a thin-client Browser window. This interfaces will be capable of displaying both numeric and graphical data in near real time. Detailed specifications of this software , it's corresponding API, low level libraries and source code will

be provided to the Equipment sites. . Customization and/or extention of this interface to use alternate DAQ systems will be the responsibility of the Equipment Sites.

5 References

1.) NEESgrid Scoping Study @ http://neesgrid.org TR.2001-01.pdf
2.) NEESgrid POP @ http://neesgrid.org/html/TR_2001/NEESgrid TR.2001-04.pdf
3.) NEESgrid LAN @ https://worktools.si.umich.edu/workspaces/ehofer/002.nsf lan_std_config_v0.doc)
4.) NEESgrid PEP @ http://neesgrid.org/html/TR_2001/NEESgrid TR.2001-02.pdf

6 Acknowledgments

This work was supported by the NSF NEESgrid project. The authors would like to thank the members of the earthquake engineering community for providing valuable input and insight which made this document possible. In particuliar those sites which participated in visits by the Systems Integrator team.

7 Appendix

Components of a Basic TelePresence System

TelePresences Server

Dell Workstation 340 Mini Tower – Estimated Cost: $5,025.00
1 each Intel Pentium IV, 2.2 Ghz, 512 K Full Speed Cache
1 each Gb PC 800 ECC RDRAM
1 each nVidia Quadro2 Pro 64 Mb VGA/DVI Graphics Card
2 each 80 Gb ATA – 100 IDE Hard Drives
1 each 2000 FP Flat Panel Monitor
1 each 20/48X IDE CD-ROM and 1 each 16X/10X/40X CD RW
1 each Internal 250 Mb Zip Drive
1 each Internal 3.5" 1.44 Mb Floppy Drive
1 each Creative Labs Sound Blaster & Harmon /Kardon 695 Speakers
One each Enhanced PS/2 Keyboard & Intellimouse PS/2
RH Linux 7.2

Subtotal $5025.00

Commodity Software

Broadware Streaming Server Software for RH Linux – Estimated Cost $2000.00
1 each Subtotal $2000.

Internet Appliances

Axis 2400 Video Server – Estimated Cost $1200.00
2 each Subtotal $2400
Axis 2191 Audio Server - Estimated Cost $300
2 each Subtotal $600

Telerobotic Camera

Axis PZT Camera Kit
Axis 2401 with Sony EVI-D30 Camera – Estimated Cost $1600
2 each Sub total $3200.00

Video Switch

InLine Video Switch Model IN3526VI – Estimated Cost $500.
1 each Subtotal $500.

Video Amplfier

Video Accessory Corp. – Estimated Cost $265
Model CVB/VDA Brick Clamping Amplifier
1 each per video source

Open Source Software. and Basic TelePresence WWW Browser Enabled Environment

Provided by the System Integrator - Cost $0.00